Cambridge International AS & A Level

Cambridge International Examinations
Cambridge International Advanced Subsidiary and Advanced Level

CANDIDATE NAME

CENTRE NUMBER

CANDIDATE NUMBER

8837430868

PHYSICS **9702/33**

Paper 3 Advanced Practical Skills 1 **May/June 2018**

2 hours

Candidates answer on the Question Paper.

Additional Materials: As listed in the Confidential Instructions.

READ THESE INSTRUCTIONS FIRST

Write your Centre number, candidate number and name on all the work you hand in.
Write in dark blue or black pen.
You may use an HB pencil for any diagrams or graphs.
Do not use staples, paper clips, glue or correction fluid.
DO **NOT** WRITE IN ANY BARCODES.

Answer **both** questions.
You will be allowed to work with the apparatus for a maximum of one hour for each question.
You are expected to record all your observations as soon as these observations are made, and to plan the presentation of the records so that it is not necessary to make a fair copy of them.
You are reminded of the need for good English and clear presentation in your answers.

Electronic calculators may be used.
You may lose marks if you do not show your working or if you do not use appropriate units.

Additional answer paper and graph paper should be used only if it becomes necessary to do so.

At the end of the examination, fasten all your work securely together.
The number of marks is given in brackets [ ] at the end of each question or part question.

For Examiner's Use	
1	
2	
Total	

This document consists of **11** printed pages and **1** blank page.

© UCLES 2018

CAMBRIDGE International Examinations

BLANK PAGE

© UCLES 2018

You may not need to use all of the materials provided.

1 In this experiment, you will investigate an electrical circuit.

(a) • Set up the circuit shown in Fig. 1.1.

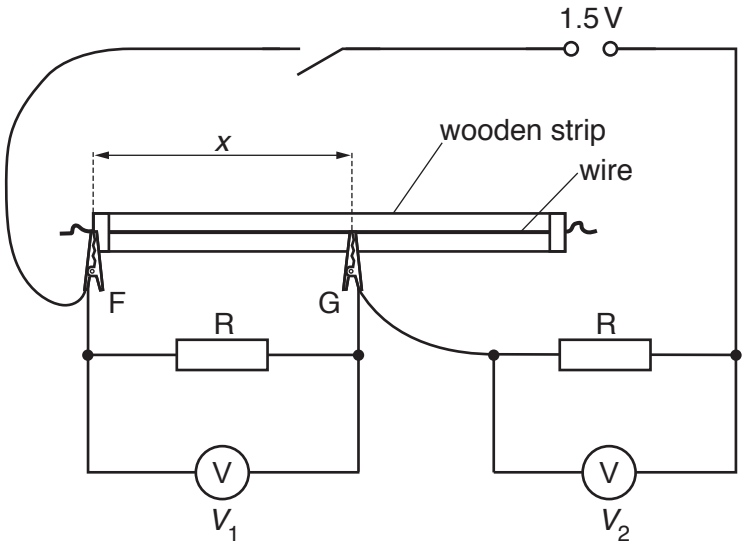

Fig. 1.1

F and G are crocodile clips.

- Place G on the wire so that the distance *x* between the ends of F and G is approximately 40 cm.
- Measure and record *x*.

x = ...

- Close the switch.
- Record the voltages V_1 and V_2.

V_1 = ...

V_2 = ...

- Open the switch.

[2]

(b) Vary x until you have six sets of readings of x, V_1 and V_2.

Record your results in a table. Include values of $(V_2 - V_1)$ and $\frac{V_1}{x}$ in your table.

[10]

(c) **(i)** Plot a graph of $(V_2 - V_1)$ on the y-axis against $\frac{V_1}{x}$ on the x-axis. [3]

(ii) Draw the straight line of best fit. [1]

(iii) Determine the gradient and y-intercept of this line.

gradient = ...

y-intercept = ...

[2]

© UCLES 2018

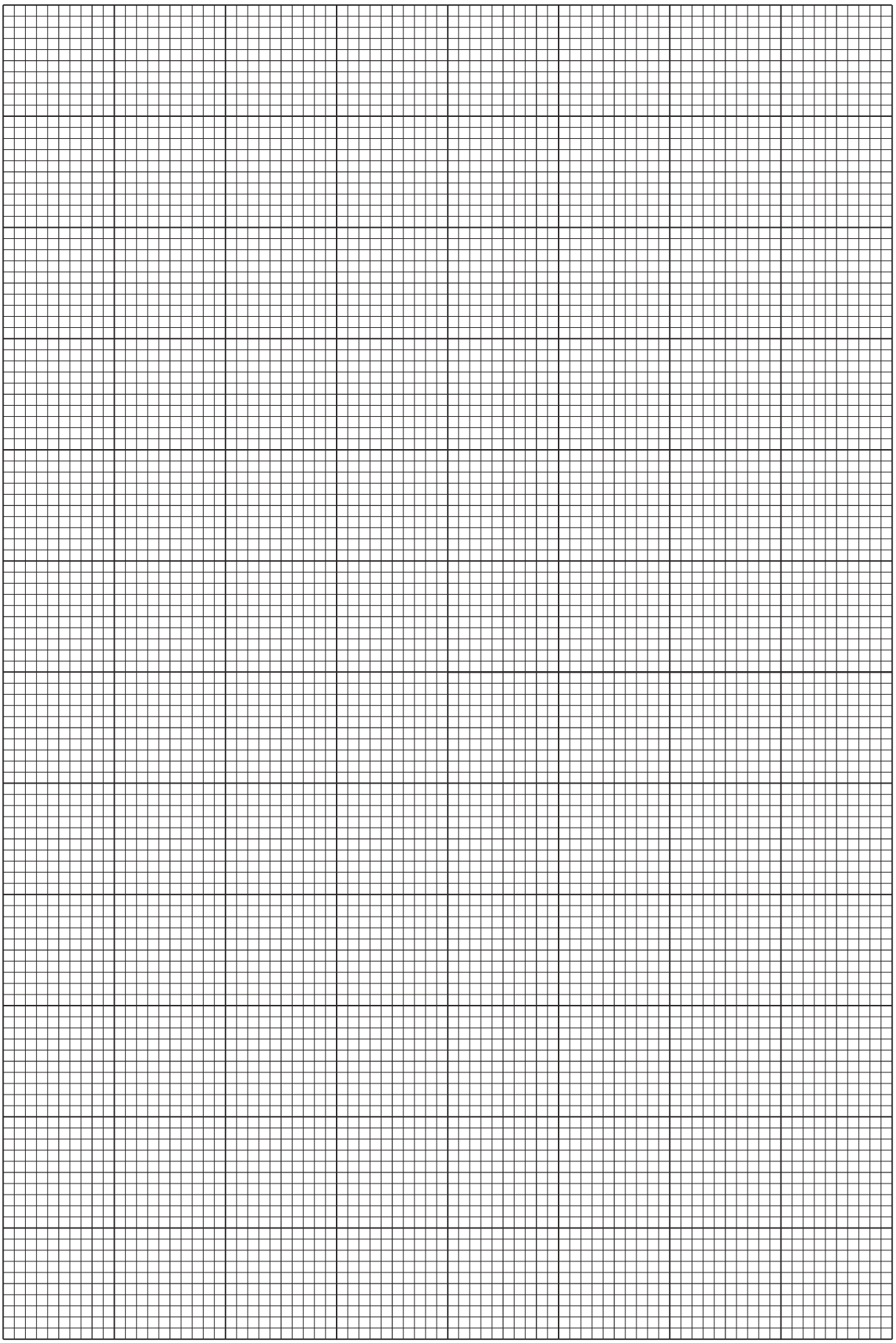

© UCLES 2018

[Turn over

(d) It is suggested that the quantities V_2, V_1 and x are related by the equation

$$(V_2 - V_1) = \frac{PV_1}{x} + Q$$

where P and Q are constants.

Using your answers in **(c)(iii)**, determine values for P and Q.
Give appropriate units.

$P =$ .....

$Q =$ .....
[2]

[Total: 20]

© UCLES 2018

You may not need to use all of the materials provided.

2 In this experiment, you will investigate the motion of an interrupted pendulum.

(a) Set up the apparatus as shown in Fig. 2.1.

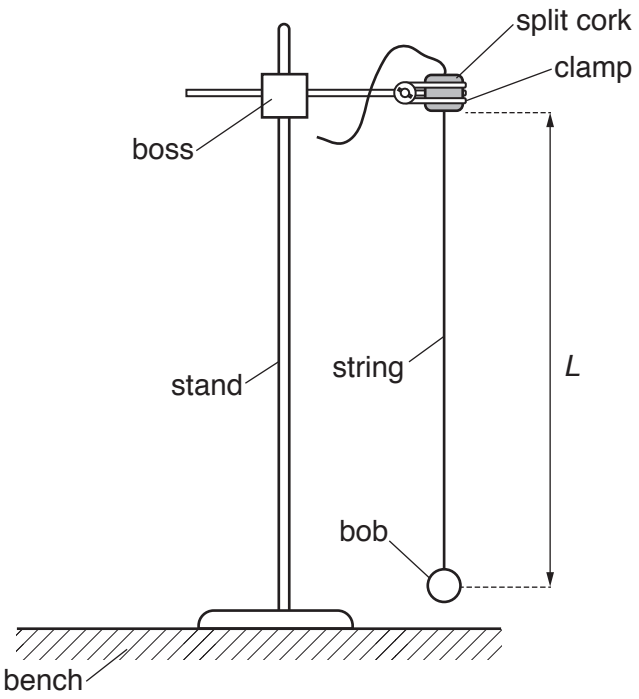

Fig. 2.1

- Adjust the string in the split cork so that the distance L between the bottom of the split cork and the centre of the bob is approximately 55 cm.
- Measure and record L.

L = ...

- Calculate $\frac{L}{2}$.

$\frac{L}{2}$ = ...

[1]

(b) (i) • Attach the other boss and clamp and the wooden rod to the stand as shown in Fig. 2.2.

• Adjust the position of the wooden rod so that, when the string is touching the rod, the angle *A* between the vertical and the string is approximately 14°, as shown in Fig. 2.2.

• Without changing the length of the pendulum, ensure the distance between the wooden rod and the centre of the bob is $\frac{L}{2}$.

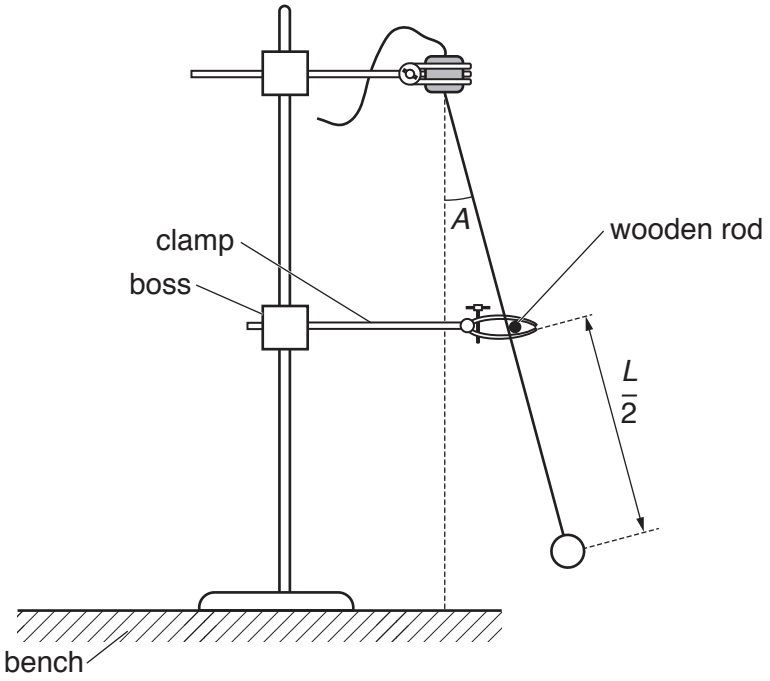

Fig. 2.2

• Measure and record angle *A*.

A = ...[1]

(ii) Estimate the percentage uncertainty in your value of *A*.

percentage uncertainty = ...[1]

© UCLES 2018

(c) (i) • Pull the bob away from the wooden rod so that the angle between the string and the vertical is 45°, as shown in Fig. 2.3.

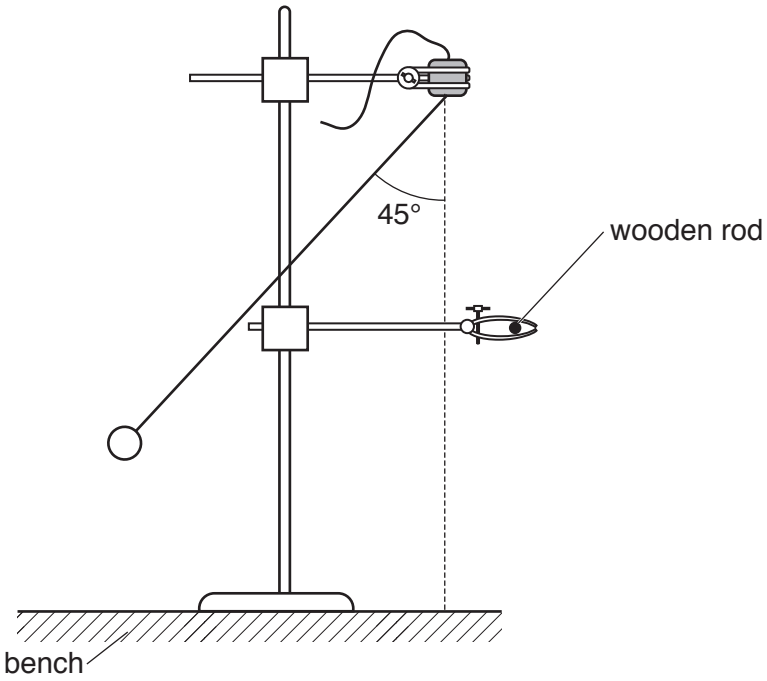

Fig. 2.3

- Release the bob. The bob will oscillate and hit the wooden rod.
- Determine the period T of these oscillations.

T = ...[2]

(ii) Calculate d where

$$d = \frac{\sin A}{\sin 45°}.$$

$d =$ .....[1]

(iii) Justify the number of significant figures that you have given for your value of d.

.....

.....

.....[1]

(d)
- Move the position of the wooden rod so that angle A is approximately 28°.
- Without changing the length of the pendulum, ensure the distance between the wooden rod and the centre of the bob is $\frac{L}{2}$.
- Measure and record angle A and repeat **(c)(i)** and **(c)(ii)**.

$A =$ .....

$T =$ .....

$d =$ .....
[3]

© UCLES 2018

(e) It is suggested that the relationship between T and d is

$$T = k\,(d + 1.707)$$

where k is a constant.

(i) Using your data, calculate two values of k.

first value of k = ...

second value of k = ...
[1]

(ii) Explain whether your results support the suggested relationship.

.....

.....

.....

.....[1]

(f) (i) Describe four sources of uncertainty or limitations of the procedure for this experiment.

1. .....

.....

2. .....

.....

3. .....

.....

4. .....

.....

[4]

(ii) Describe four improvements that could be made to this experiment. You may suggest the use of other apparatus or different procedures.

1. .....

.....

2. .....

.....

3. .....

.....

4. .....

.....

[4]

[Total: 20]

Permission to reproduce items where third-party owned material protected by copyright is included has been sought and cleared where possible. Every reasonable effort has been made by the publisher (UCLES) to trace copyright holders, but if any items requiring clearance have unwittingly been included, the publisher will be pleased to make amends at the earliest possible opportunity.

To avoid the issue of disclosure of answer-related information to candidates, all copyright acknowledgements are reproduced online in the Cambridge International Examinations Copyright Acknowledgements Booklet. This is produced for each series of examinations and is freely available to download at www.cie.org.uk after the live examination series.

Cambridge International Examinations is part of the Cambridge Assessment Group. Cambridge Assessment is the brand name of University of Cambridge Local Examinations Syndicate (UCLES), which is itself a department of the University of Cambridge.